Copper Subloop Access Points

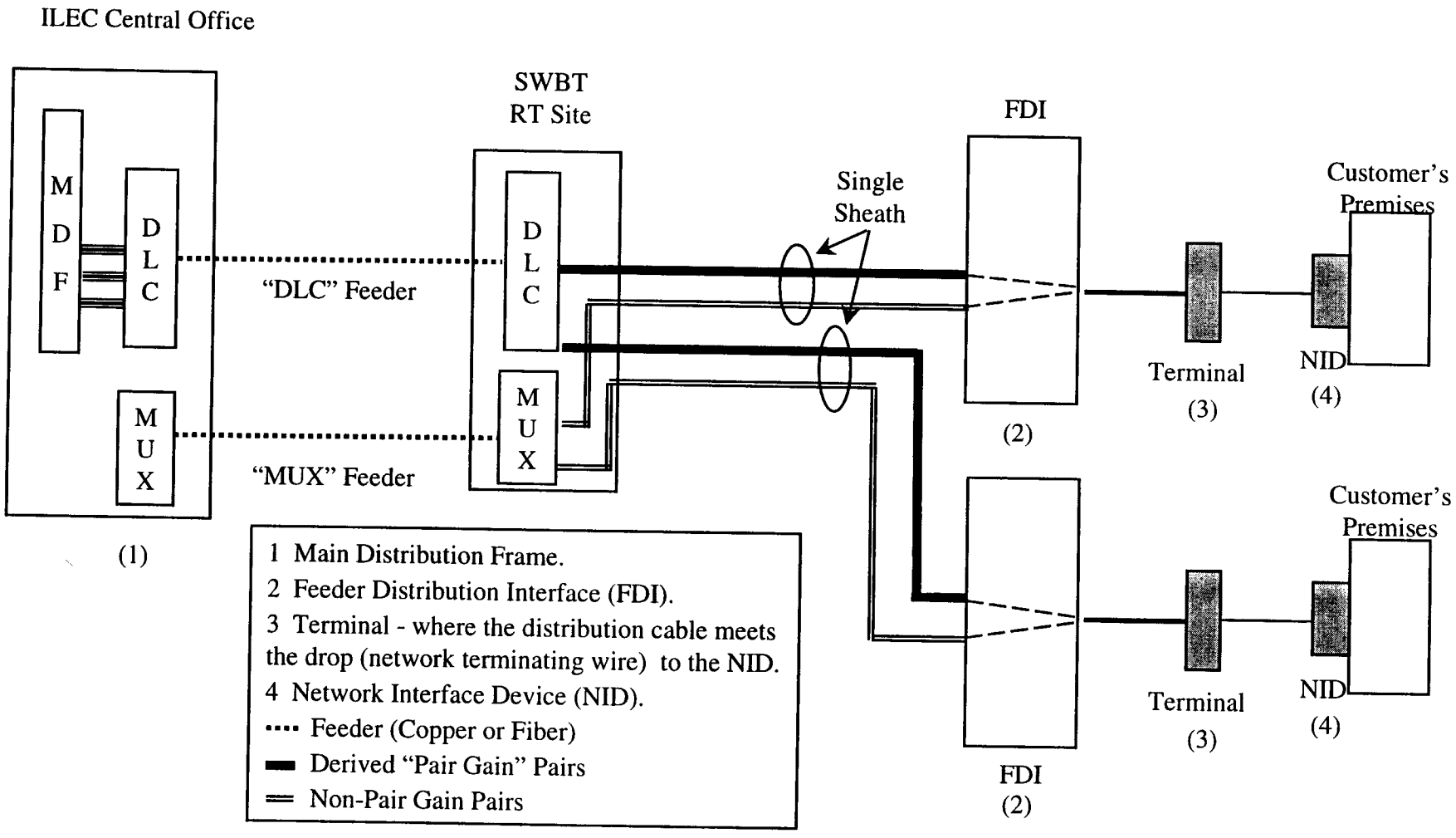

NOTE: "MUX" is representing copper pairs available in the distribution that is not being derived from DLC (and may not exist in all locations). Such facilities may be"Home Run" copper, in which case "MUX" represents a hardsplice case in the RT or it may be a fiber optic terminal (FOT) used to provision DS1 facilities to customer premises.

Ex. 5
6730-T1-161

Copper Subloop Access Points w/ECS
No space in CEV/HUT/Cabinet

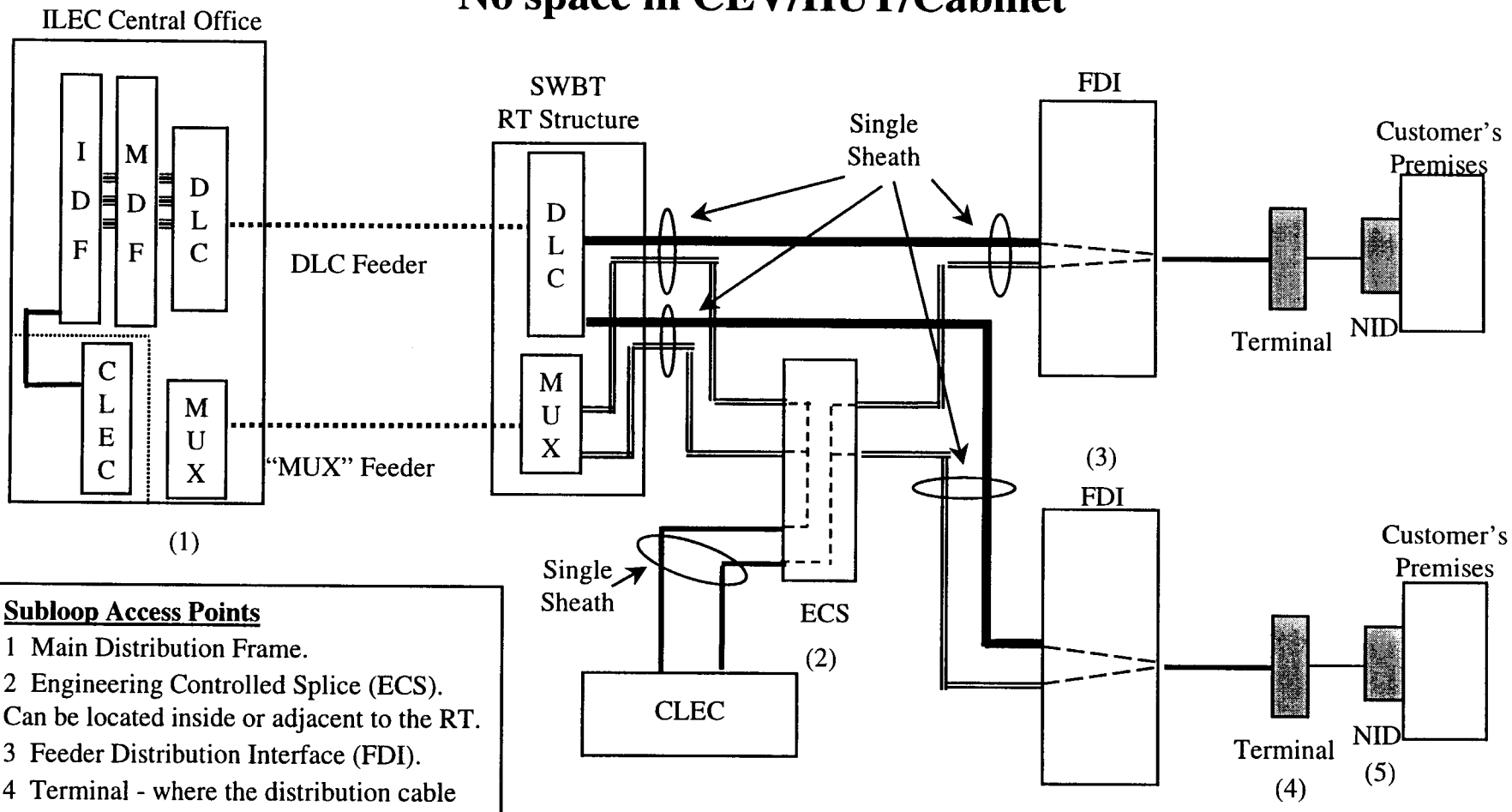

Subloop Access Points

1 Main Distribution Frame.

2 Engineering Controlled Splice (ECS). Can be located inside or adjacent to the RT.

3 Feeder Distribution Interface (FDI).

4 Terminal - where the distribution cable meets the drop (network terminating wire) to the NID.

5 Network Interface Device (NID).

ECS shown to provide non-Line Shared service (accesses non-DLC pairs). CLEC may request Line Shared-capable subloops, which would requiring re-cabling DLC-derived Pair Gain pairs through the ECS (shown in next diagram).

NOTE: "MUX" is representing copper pairs available in the distribution that is not being derived from DLC (and may not exist in all locations). Such facilities may be"Home Run" copper, in which case "MUX" represents a hardsplice case in the RT or it may be a fiber optic terminal (FOT) used to provision DS1 facilities to customer premises.

Sample Architecture for Subloop Access Arrangements

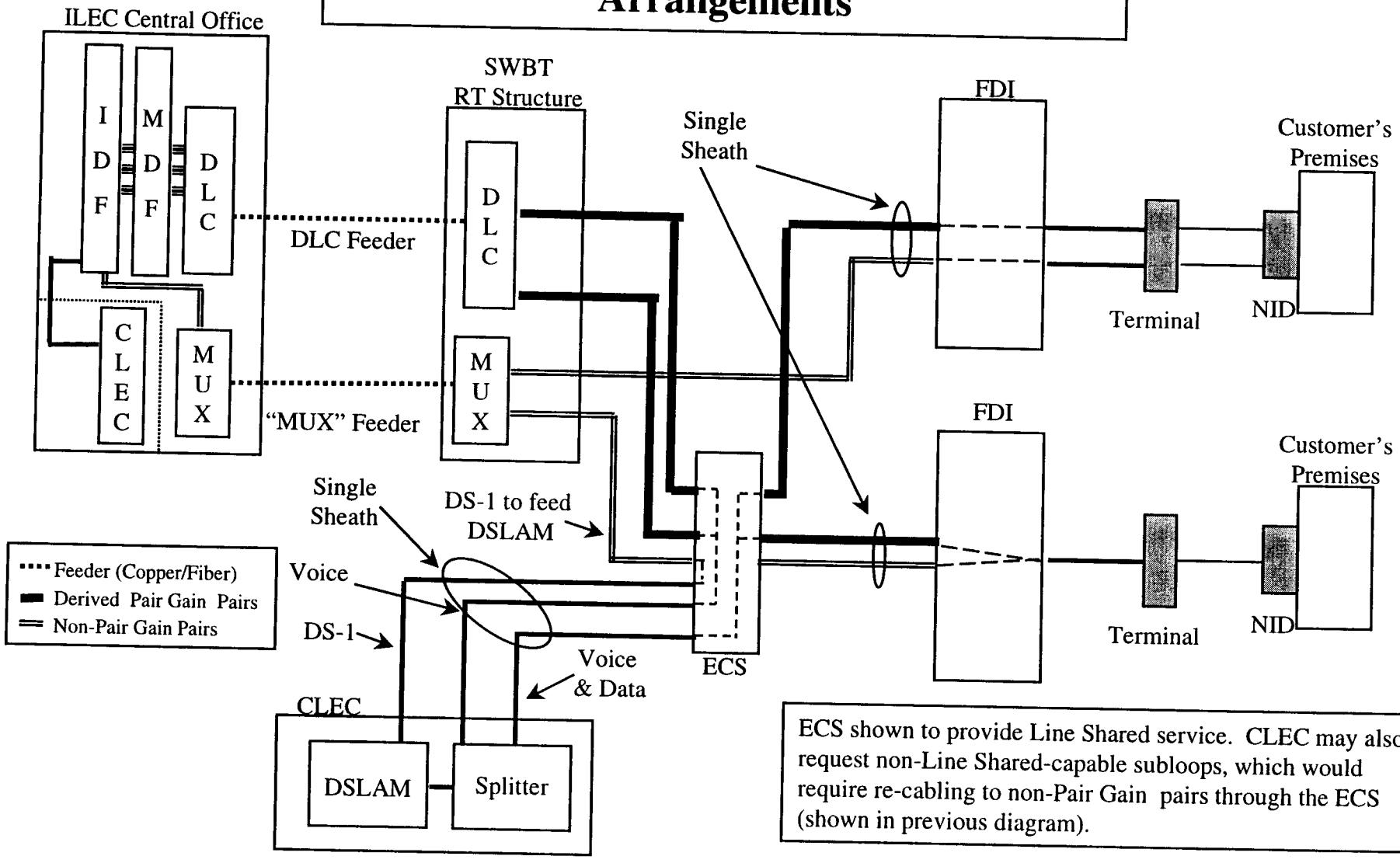

ECS shown to provide Line Shared service. CLEC may also request non-Line Shared-capable subloops, which would require re-cabling to non-Pair Gain pairs through the ECS (shown in previous diagram).

NOTE: DS-3 and Dark Fiber subloops are also available to feed the DSLAM, although they are not cross-connected to CLECs via the ECS, but rather are cross-connected via DSX-3 panels/Fiber Termination Panels constructed specifically for CLEC subloop access. Also note the disclaimer regarding the "MUX" on the previous page.

SINGLE DEMARC IN MDU ARCHITECTURE

ILEC SINGLE DEMARCATION

NID at single location (SPOI) for entire property.

All wiring behind the SPOI is responsibility of property owner/agent.

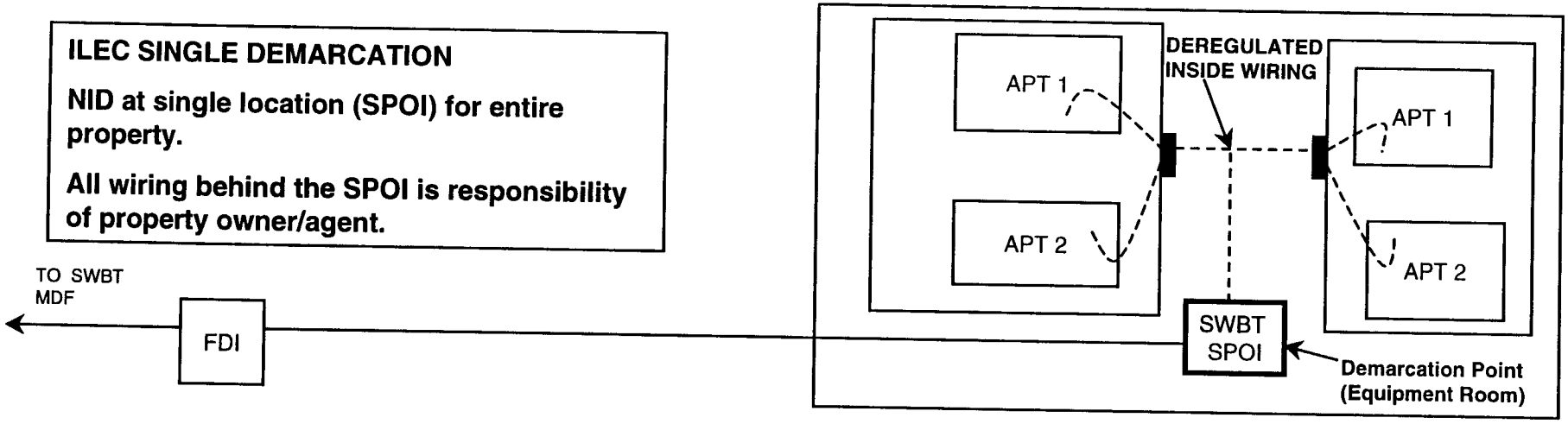

MULTI DEMARCS IN MDU ARCHITECTURE

ILEC MULTIPLE DEMARCATION

NID located in each apartment.

DEREGULATED INSIDE WIRING CUSTOMER OWNED OR CONTROLLED - - - - - - -
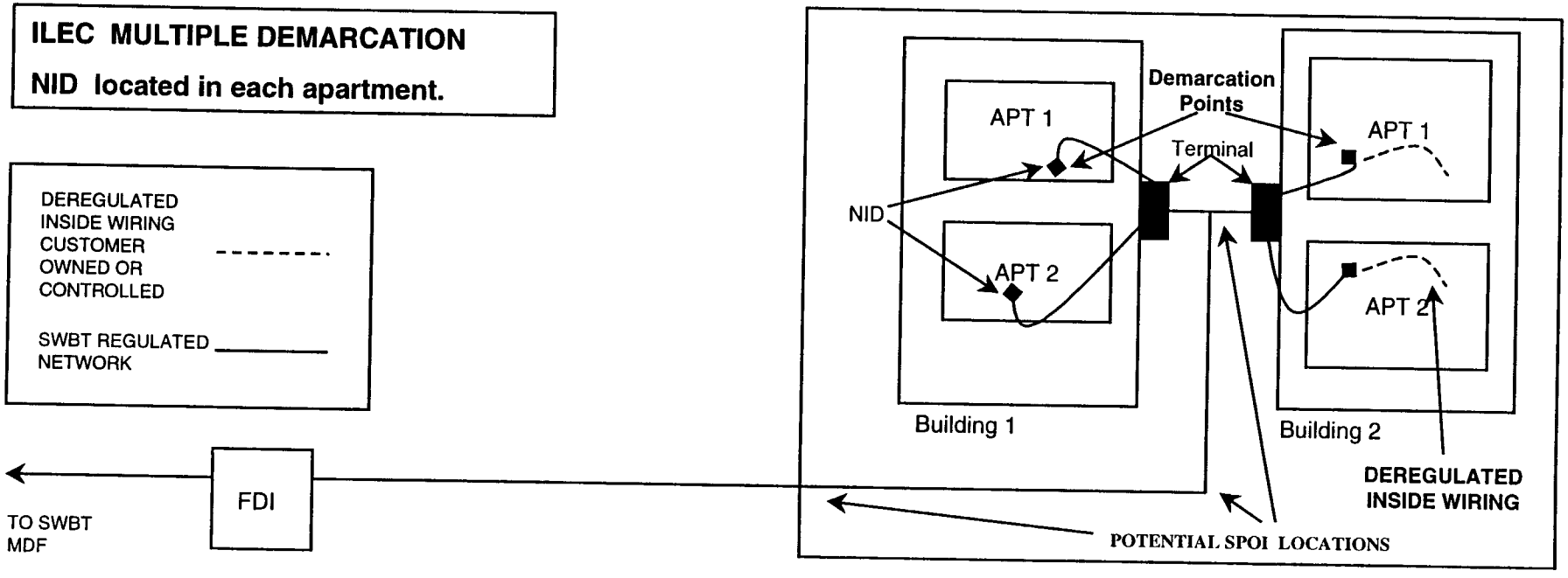
SWBT REGULATED NETWORK _____